Model RP40

REDUCED PRESSURE PRINCIPLE BACKFLOW PREVENTER

Job Name:	Contractor:
Job Location:	P.O. Number:
Engineer:	Representative:
Tag:	Wholesale Distributor:

SPECIFICATIONS

The 2 ½" - 10" Reduced Pressure Principle Backflow Preventer shall be an Apollo® Model RP40. The assembly shall be manufactured in America. The epoxy-coated ductile iron body shall be configured with individually-accessible top-mounted check valves. The relief valve portion shall be positioned at the bottom of the assembly with a separate center-accessed cover. The replaceable seat rings shall be bronze threaded-in type and the reversible seat discs shall be silicone rubber. The Apollo® domestic ball valve test cocks shall have stainless steel handles. The assembly shall prevent contamination of the potable water supply due to back-siphonage or backpressure from substances that are health or non-health hazards. The pressure drop across the assembly shall be documented by USC's FCCC&HR approval curves.

FEATURES

- Replaceable seat rings
- Reversible seat discs
- Individual access to check valves
- Designed for easy maintenance
- Corrosion resistant epoxy-coated ductile iron body
- MADE IN THE USA

MATERIAL SPECIFICATIONS

Part Name	Material
Body	Epoxy-coated (FDA) Ductile Iron
Relief Valve Body	Bronze
Covers	Epoxy-coated (FDA) Ductile Iron
Check Valve Seats	Bronze
Springs	Stainless Steel
Seat Discs	EPDM & Silicone
Fasteners	Stainless Steel

PERFORMANCE RATING

Maximum Working Pressure 175 psi
Hydrostatic Test Pressure 350 psi
Temperature Range 33 °F – 140 °F

APPROVALS

ASSE® 1013, CSA® B64.4, IAPMO listed, USC's FCCC&HR, AWWA C-511, UL*, and FM*.

*UL and FM installations must include indicating-type shut-off valves.



PROUDLY MADE IN USA — ISO 9001:2008 REGISTERED

ORDERING INFORMATION

4 0 – 2 X X – 0 X

Y-STRAINER
SIZE
SHUT-OFF VALVES

Y-STRAINER

- ❒ **0** – None (Standard)
- ❒ **1** – With Y-Strainer (Flanged, shipped loose)

SIZE

- ❒ **9** – 2 ½"
- ❒ **0** – 3"
- ❒ **A** – 4"
- ❒ **C** – 6"
- ❒ **E** – 8"
- ❒ **G** – 10"

SHUT-OFF VALVES (Inlet x Outlet)

- ❒ **1** – Less Shut-off Valves (flanged-end body)
- ❒ **2** – NRS Flanged x NRS Flanged
- ❒ **3** – OS&Y Flanged x OS&Y Flanged
- ❒ **5** – Epoxy-coated Flanged Ball Valves
- ❒ **6** – OS&Y Flg x Post Indicator Flg**
- ❒ **7** – OS&Y Flg x OS&Y Grv
- ❒ **8** – OS&Y Grv x OS&Y Grv
- ❒ **10** – OS&Y Flg x Post Indicator Grv**

**Post Indicator option not available in 2 ½" size

This specification is provided for reference only. Conbraco reserves the right to change any portion of this specification without notice and without incurring obligation to make such changes to Conbraco products previously or subsequently sold.

Model RP40

REDUCED PRESSURE PRINCIPLE BACKFLOW PREVENTER

DIMENSIONS (in.) – WEIGHTS (lbs.)

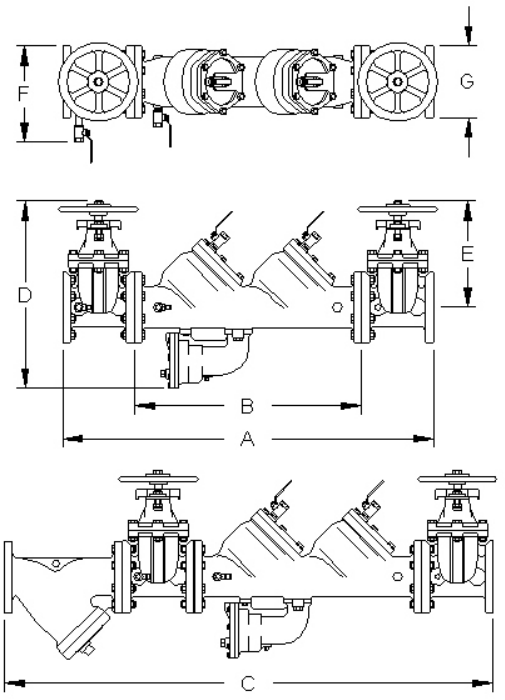

Size	2 1/2"	3"	4"	6"	8"	10"
A*	37 5/16	38 5/16	46 3/4	63 3/8	75 3/8	88 3/8
B* (flanged-end body)	22 1/16	22 1/16	28 1/2	42 1/8	52 1/8	62 1/8
C*	47 15/16	49 15/16	61 3/4	81 7/8	96 7/8	114 5/8
D (NRS)	20 7/8	21 7/8	25 3/16	30 1/2	38 1/2	44
D(OS&Y Open)	25 7/8	28 3/8	33 3/16	41 5/8	53 3/4	63 1/4
E (NRS)	11 3/8	12 3/8	14 3/4	19	22 1/2	26 1/2
E (OS&Y Open)	16 3/8	18 7/8	22 3/4	30 1/8	37 3/4	45 3/4
F	9 5/8	10 3/8	11 7/8	14 5/8	16 3/4	19 1/4
G	7	7 1/2	9	11	13 1/2	16
Test Cocks (NPT)	1/2	1/2	1/2	3/4	3/4	3/4
Net Wt. (Less Valves)	120	122	196	430	715	1443
Net Wt. (w/ OS&Y shut-off valves)	229	259	402	754	1210	2286

* Nominal dimensions are shown. Allowances must be made for manufacturers' tolerances.

FLOW CURVES

(●) Rated flow as determined by USC's FCCC&HR and ASSE design performance standards.

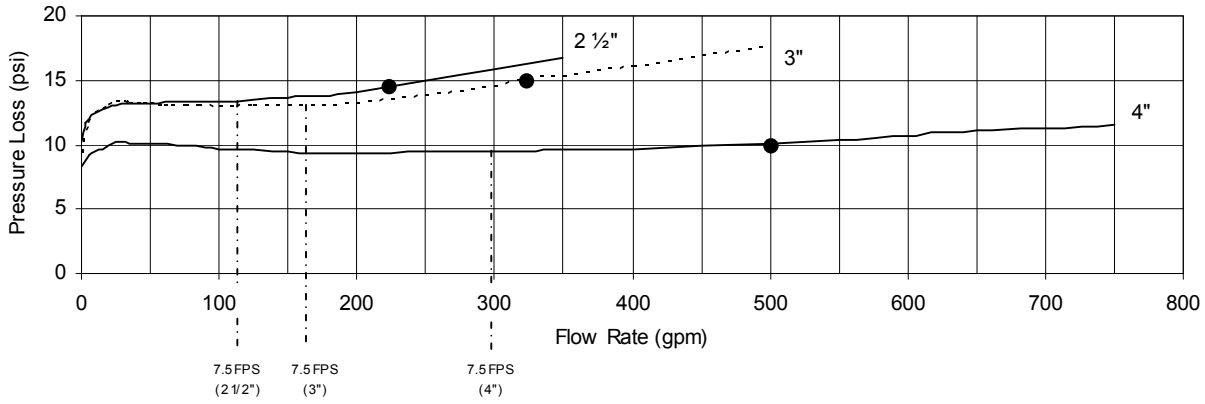

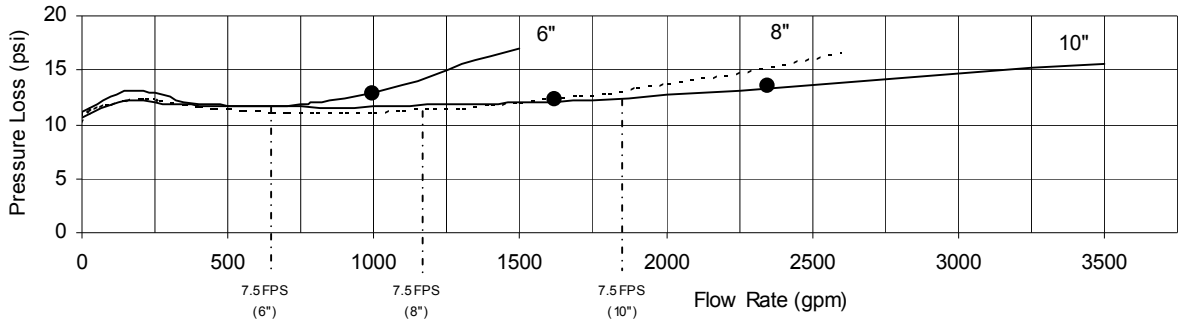

This specification is provided for reference only. Conbraco reserves the right to change any portion of this specification without notice and without incurring obligation to make such changes to Conbraco products previously or subsequently sold.