CONBRACO

40-200
40-700
6”-10”

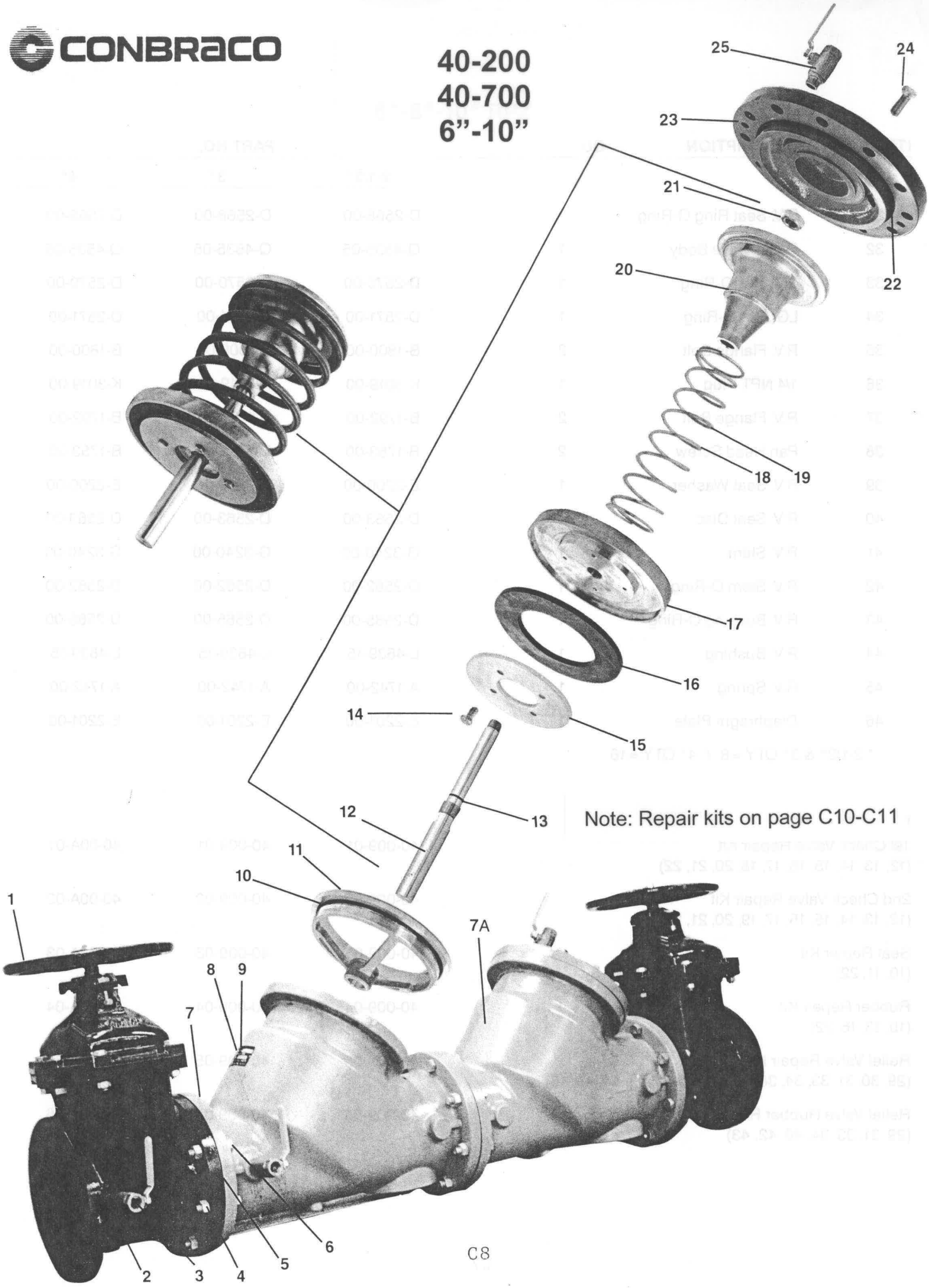

Note: Repair kits on page C10-C11

40-200
40-700
21/2"-6"
Relief Valve

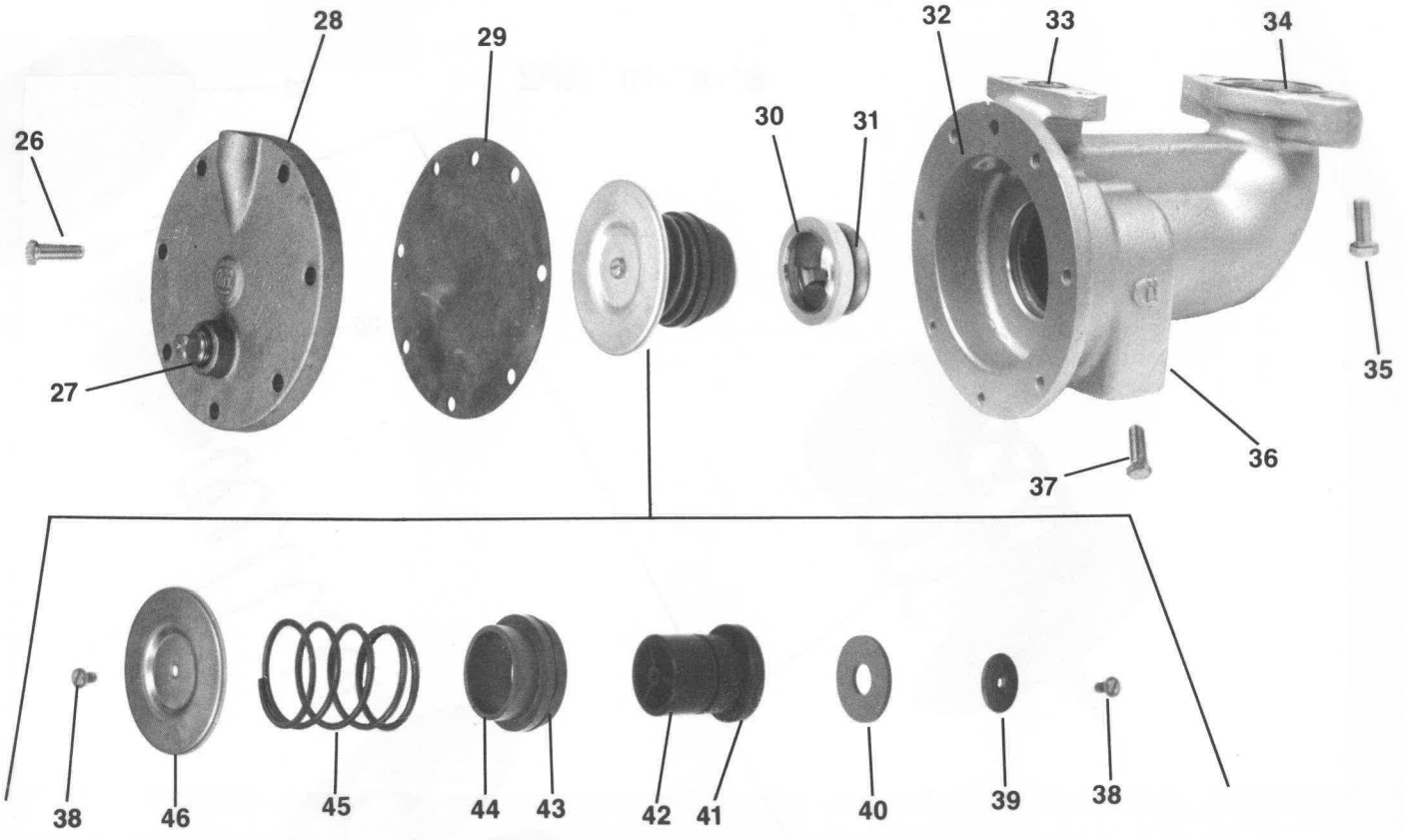

Note: Repair kits on page C7

40-200
40-700
8”-10”
Relief Valve

Note: 6” Relief valve on page C5

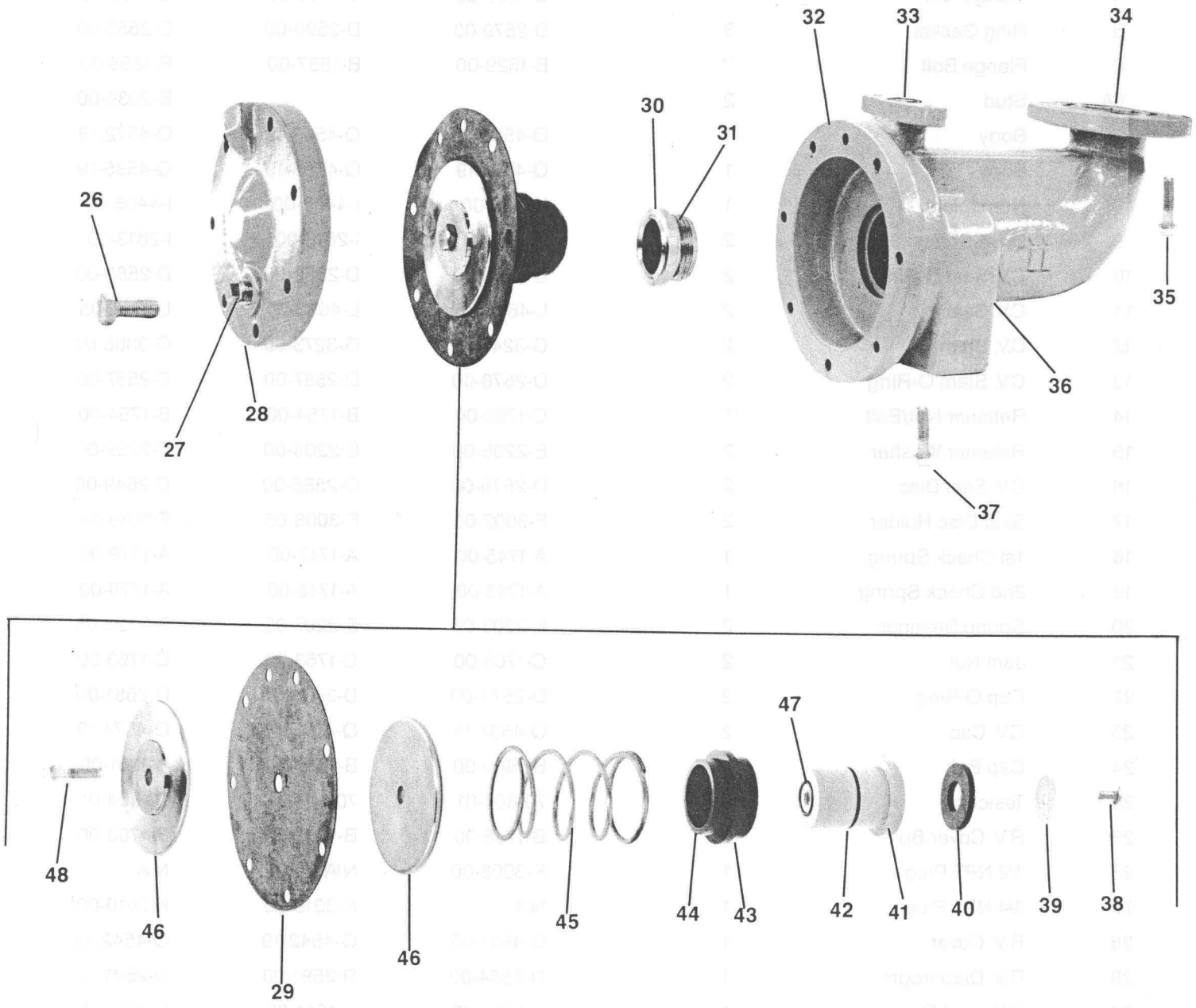

RPZ
Parts List

40-200
40-700

ITEM NO.	DESCRIPTION	QUANTITY	PART NO.		
			6″	8″	10″
1	Shut-Off Valve (OS&Y)	2	W-6825-00	W-6826-00	W-6859-00
1	Shut-Off Valve (NRS)	2	W-6744-00	W-6827-00	W-6858-00
2	Brass Nipple	1	K-3412-00	K-3412-00	K-3412-00
3	Test Cock	1	70-104-01	70-104-01	70-104-01
4	Flange Nut	*	C-1759-00	C-1759-00	C-1793-00
5	Ring Gasket	3	D-2579-00	D-2590-00	D-2653-00
6	Flange Bolt	**	B-1829-00	B-1857-00	B-1858-00
6A	Stud	2			B-2036-00
7	Body	1	Q-4538-19	Q-4543-19	Q-4572-19
7A	Body	1	Q-4591-19	Q-4593-19	Q-4595-19
8	Nameplate	1	I-4406-00	I-4406-00	I-4406-00
9	Drive Screw	2	I-2613-00	I-2613-00	I-2613-00
10	C.V. Seat O-Ring	2	D-2576-00	D-2589-00	D-2588-00
11	C.V. Seat	2	L-4644-05	L-4653-05	L-4759-05
12	C.V. Stem	2	G-3246-00	G-3273-00	G-3305-00
13	C.V. Stem O-Ring	2	D-2578-00	D-2587-00	D-2587-00
14	Retainer Nut/Bolt	***	C-1760-00	B-1754-00	B-1754-00
15	Retainer Washer	2	E-2205-00	E-2208-00	E-2229-00
16	C.V. Seat Disc	2	D-2575-00	D-2586-00	D-2649-00
17	Seat Disc Holder	2	F-3002-05	F-3008-05	F-3019-05
18	1st Check Spring	1	A-1745-00	A-1747-00	A-1778-00
19	2nd Check Spring	1	A-1746-00	A-1748-00	A-1779-00
20	Spring Retainer	2	E-2203-05	E-2207-05	E-2228-05
21	Jam Nut	2	C-1706-00	C-1763-00	C-1763-00
22	Cap O-Ring	2	D-2577-00	D-2588-00	D-2651-00
23	C.V. Cap	2	Q-4537-19	Q-4545-19	Q-4574-19
24	Cap Bolt	****	B-1800-00	B-1690-00	B-1881-00
25	Testcock	3	70-804-01	70-804-01	70-804-01
26	R.V. Cover Bolt	7	B-1796-00	B-1703-00	B-1703-00
27	1/2 NPT Plug	1	K-3008-00	N/A	N/A
27	3/4 NPT Plug	1	N/A	K-3010-00	K-3010-00
28	R.V. Cover	1	Q-4531-05	Q-4542-19	Q-4542-19
29	R.V. Diaphragm	1	D-2564-00	D-2591-00	D-2591-00
30	R.V. Seat Ring	1	L-4638-05	L-4651-05	L-4651-05
31	R.V. Seat Ring O-Ring	1	D-2568-00	D-2593-00	D-2593-00
32	Relief Valve Body	1	Q-4535-05	Q-4541-19	Q-4541-19

* 6″ & 8″ QTY=24 / 10″ QTY=38
** 6″ & 8″ QTY=24 / 10″ QTY=34
*** 6″ QTY=2 / 8″ & 10″ QTY=8
**** 6″ QTY=12 / 8″ & 10″ QTY=24

21/2-10" Seat Removal Tool Specifications

To assist in removing seats in 2-1/2" - 10" 40 series backflow preventers use schedule 40 pipe cut to the following dimensions.

Seat Size	Type	Size	Length	No. Slots	Slot Width	Slot Depth
2-1/2" & 3"	Check Valve	2"	8"	2	7/16"	5/8"
4	Check Valve	3"	10"	2	9/16"	3/4"
6	Check Valve	4"	13"	2	11/16"	3/4"
8	Check Valve	6"	16"	3	11/16"	7/8"
2-1/2" - 6"	Relief Valve	1-1/4"	8"	2	1/2"	1/2"
8" & 10"	Relief Valve	1-1/2"	8"	2	1/2"	1/2"

Slots to be equally apart.
Drill hole through other end of pipe to facilitate bar size used for handle.

RPZ
Parts List

40-200
40-700

ITEM NO.	DESCRIPTION	QUANTITY	PART NO.		
			6″	8″	10″
33	SM. R.V. O-Ring	1	D-2570-00	D-2186-00	D-2186-00
34	LG. R.V. O-Ring	1	D-2571-00	D-2304-00	D-2304-00
35	R.V. Flange Bolt	****	B-1800-00	B-1669-00	B-1669-00
36	1/4 NPT Plug	1	K-3019-00	K-3019-00	K-3019-00
37	R.V. Flange Bolt	2	B-1792-00	B-1669-00	B-1669-00
38	Pan Head Screw	*****	B-1753-00	B-1856-00	B-1856-00
39	R.V. Seat Washer	1	E-2200-00	E-2210-00	E-2210-00
40	R.V. Seat Disc	1	D-2563-00	D-2595-00	D-2595-00
41	R.V. Stem	1	G-3240-00	G-3274-05	G-3274-05
42	R.V. Stem O-Ring	1	D-2562-00	D-2594-00	D-2594-00
43	R.V. Bushing O-Ring	1	D-2565-00	D-2592-00	D-2592-00
44	R.V. Bushing	1	L-4639-15	L-4652-15	L-4652-15
45	R.V. Spring	1	A-1742-00	A-1749-00	A-1749-00
46	Diaphragm Plate	******	E-2201-00	E-2209-05	E-2209-05
47	Stem Face O-Ring	1	N/A	D-2106-00	D-2106-00
48	Diaphragm Bolt	1	N/A	B-1800-00	B-1800-00
49	Seat Bolt	6	N/A	N/A	B-1849-00

**** 6″ QTY = 2 / 8″ & 10″ QTY = 4
***** 6″ QTY = 2 / 8″ & 10″QTY = 1
****** 6″ QTY = 1 / 8″ & 10″QTY = 2

Repair Kits

1st Check Valve Repair Kit (12, 13, 14, 15, 16, 17, 18, 20, 21, 22)	40-00C-01	40-00E-01	40-00G-01
2nd Check Valve Repair Kit (12, 13, 14, 15, 16, 17, 19, 20, 21, 22)	40-00C-02	40-00E-02	40-00G-02
Seat Repair Kit (10, 11, 22)	40-00C-03	40-00E-03	40-00G-03
Rubber Repair Kit (10, 13, 16, 22)	40-00C-04	40-00E-04	40-00G-04
Relief Valve Repair Kit (29, 30, 31, 33, 34, 38, 39, 40, 41, 42, 43, 44, 45, 46, 47, 48)	40-00C-05	40-00E-05	40-00G-05
Relief Valve Rubber Repair Kit (29, 31, 33, 34, 40, 42, 43, 47)	40-00C-06	40-00E-06	40-00G-06