AMES CO.
VALVES & BACKFLOW ASSEMBLIES

MODEL 4000 RP

REDUCED PRESSURE PRINCIPLE BACKFLOW PREVENTION ASSEMBLY

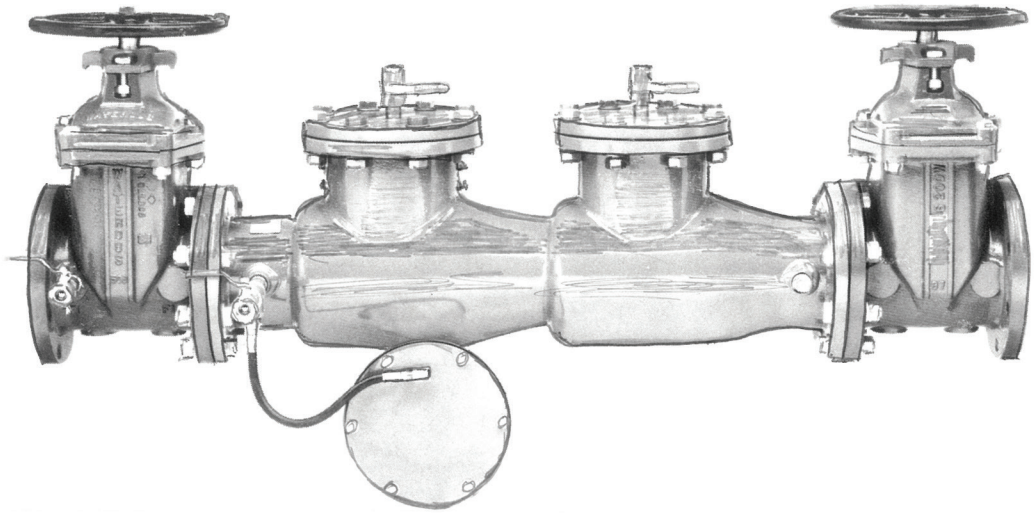

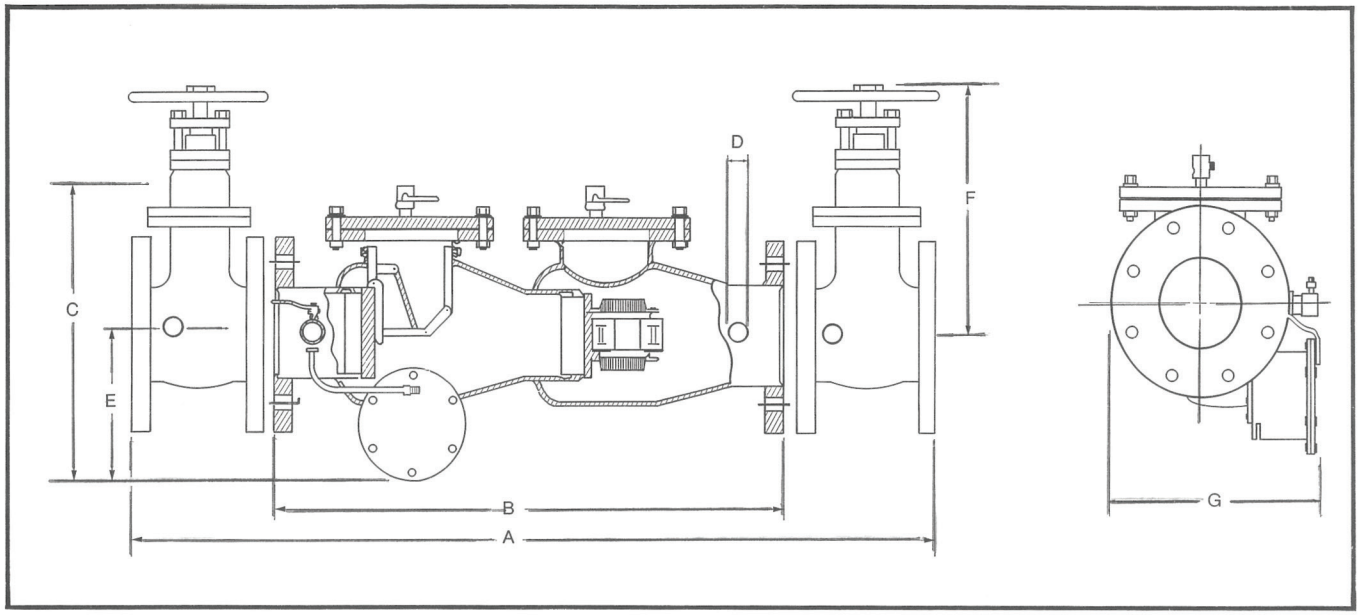

Ames - Weights & Dimensions (Inches)

Model	Size	A	B	C	D	E	F	G	NET WT with gates	NET WT w/o gates
4000 RP	4"	45½	27½	23 7/16	¾ NPT	9½	13⅜	18	288 lbs.	148 lbs.
4000 RP	6"	58⅞	37⅞	25½	¾ NPT	10½	16¾	20	465 lbs.	205 lbs.
4000 RP	8"	68¾	45¾	27	¾ NPT	12	20 3/16	22½	779 lbs.	369 lbs.
4000 RP	10"	71¾	45¾	27	¾ NPT	12	24⅛	25	1059 lbs.	409 lbs.

Features

- Fusion bonded epoxy lined and coated.
- Stainless steel internal parts.
- One piece body design.
- Heavy-duty steel body design.
- Air Gap Drain available.
- Lighter weight than cast or ductile iron assemblies.
- Rated at 175 PSI for water temperatures up to 140° F
- Flange dimensions and holes in accordance with AWWA Class D.
- Body nameplate provides nominal size, direction of flow, PSI rating and year of manufacture.
- Lightweight body design reduces freight and installation costs.
- Body material ASTM A36
- Removable bronze seat ring ASTM 862-82.

AMES CO.
VALVES & BACKFLOW ASSEMBLIES

*Flow Characteristics (including shut off valves)

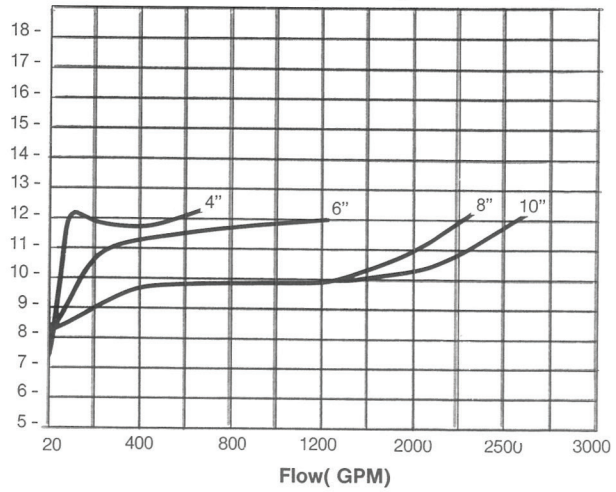

Reduced Pressure Principle Backflow Prevention Device Parts List

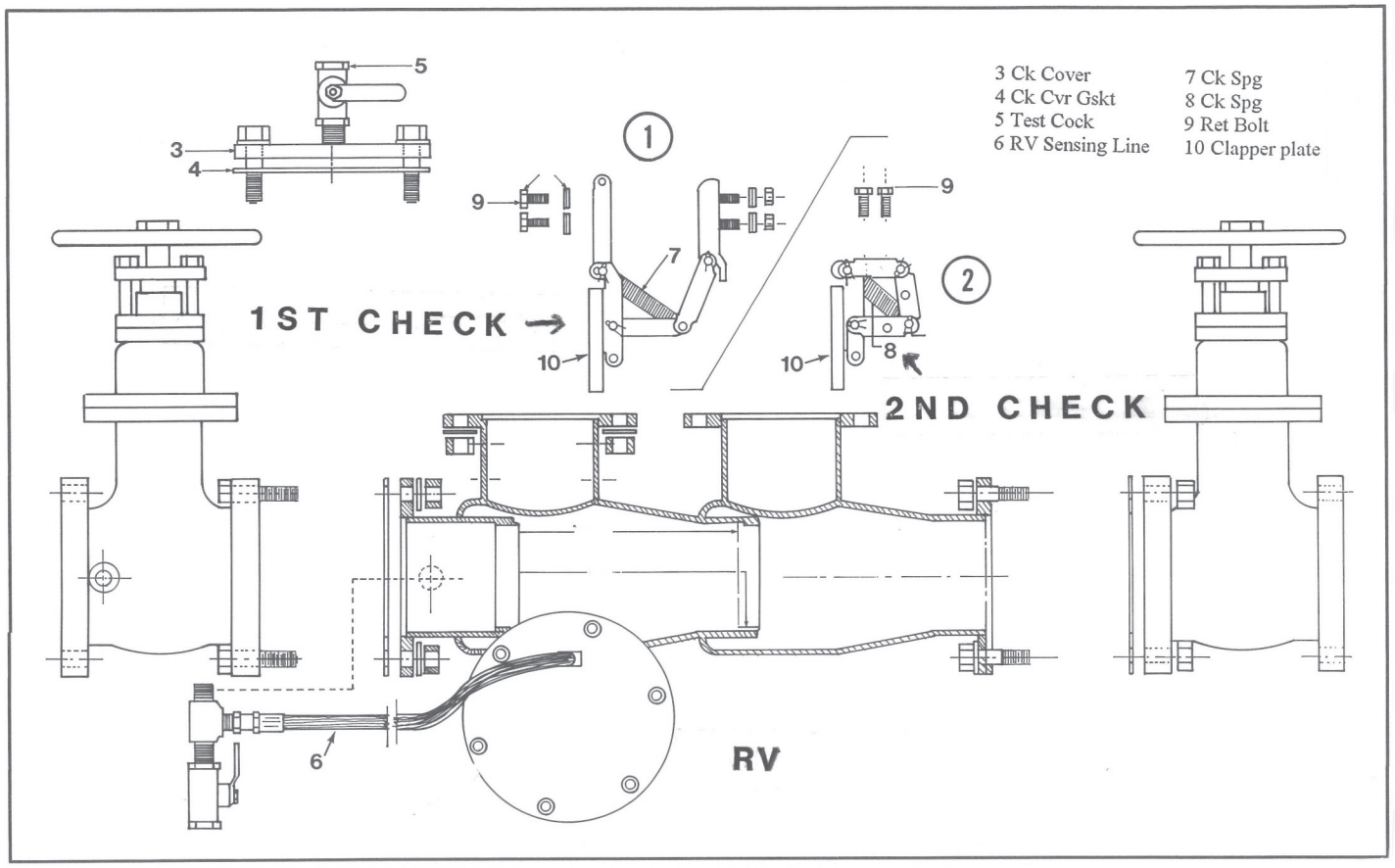

Differential Pressure Relief Valve for 4000 RP and 5000 RPDA

AIR GAP DRAIN INSTALLATION

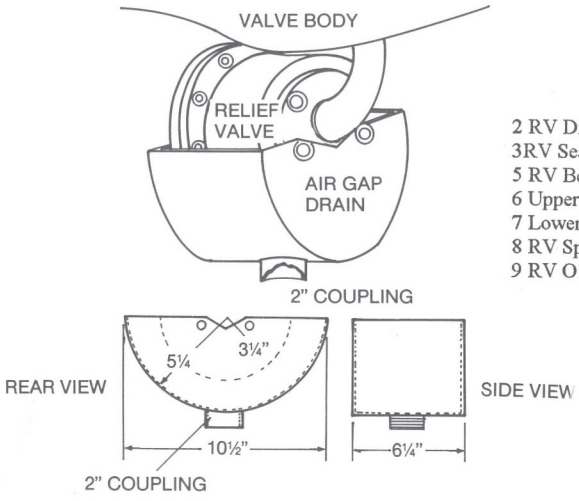

RELIEF VALVE (Section View)

2 RV Disc
3RV Seat
5 RV Bellofram
6 Upper Bfrm Plate
7 Lower Bfrm Plate
8 RV Spring
9 RV O'ring

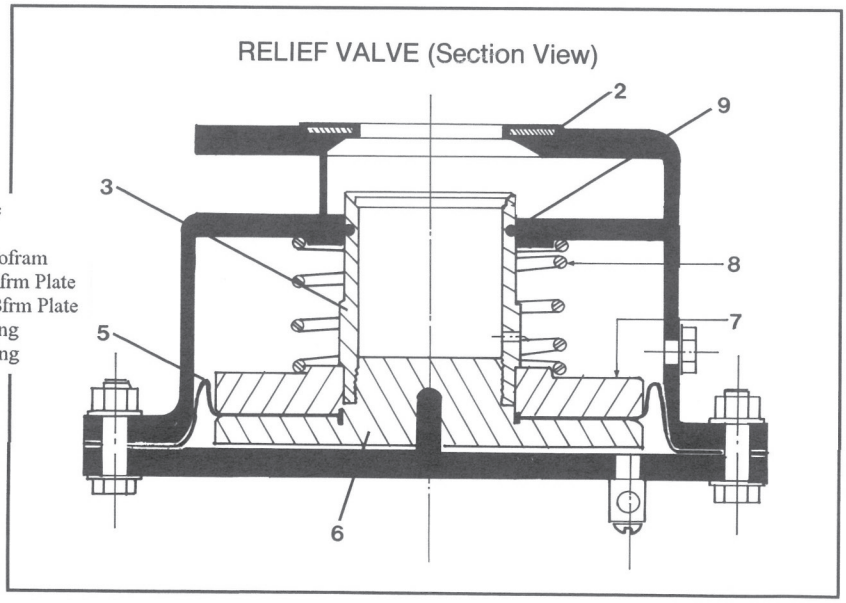

NOTE: Same relief valve is used for all size mainline valves 4" through 10"

