Series 5000CIV

Reduced Pressure Detector Assemblies

Sizes: 2½" – 10" (65 – 250mm)

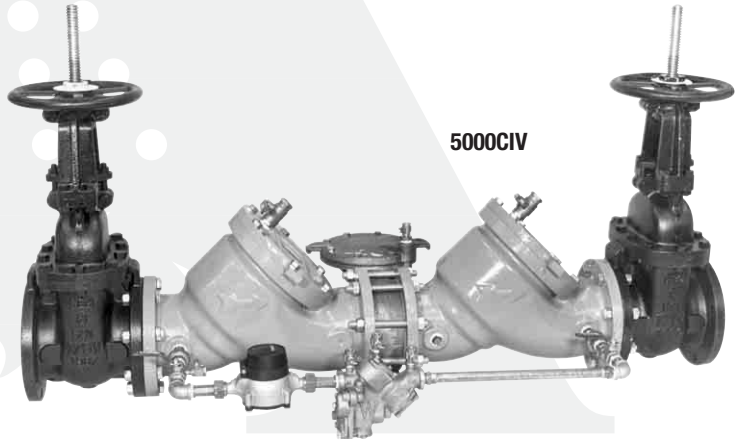

Features

- Body construction fused epoxy coated cast iron
- Replaceable bronze seats
- Maximum flow at low pressure drop
- Compact for economy combined with performance
- Design simplicity for easy maintenance
- Furnished with a CFM or GPM ⅝" x ¾" (16 x 19mm) recordall meter Model 25, bronze
- No special tools required

Series 5000CIV Reduced Pressure Detector Assemblies are used in health hazard applications and are designed exclusively for use in accordance with water utility authority containment requirements. It is mandatory to prevent the reverse flow of fire protection system substances, i.e., glycerin wetting agents, stagnant water and water of non-potable quality from being pumped or siphoned into the potable water line. The Series 5000CIV is ideal for fire protection systems to detect leaks or unauthorized use of water.

Modular check design concept facilitates maintenance and assembly access. All sizes are standardly equipped with AWWA epoxy coated, UL/FM listed OSY resilient seated gate valves, CFM (cubic feet per minute) or GPM (gallon per minute) meter and ball type test cocks. A pressure differential relief valve is located in a zone between the check valves.

Specifications

A Reduced Pressure Detector Assembly shall be installed on fire protection systems when connected to a public water supply. Degree of hazard present is determined by the local authority having jurisdiction. The unit shall be a complete assembly including UL listed OSY shutoff valves with FM approval. Including an auxiliary line consisting of an approved backflow preventer and water meter. The assembly shall meet the requirements of AWWA C511-92; UL Classified File No. EX3185; CSA B64 and USC Manual 8th. Edition. Assembly shall be an Ames Company Series 5000CIV.

Job Name _____ Contractor _____

Job Location _____ Approval _____

Engineer _____ Contractor's P.O. No. _____

Approval _____ Representative _____

Ames product specifications in U.S. customary units and metric are approximate and are provided for reference only. For precise measurements, please contact Ames Technical Service. Ames reserves the right to change or modify product design, construction, specifications, or materials without prior notice and without incurring any obligation to make such changes and modifications on Ames products previously or subsequently sold.

Materials

Epoxy coated cast iron body, bronze seat and disc holder; stainless steel trim and durable, tight-seating rubber check valve discs.

All sizes furnished with bronze body ball valve test cocks. Furnished with outside stem and yoke (OSY) gate valves UL/FM listed. Series 5000CIV bypass line unit consists of an approved Reduced Pressure Zone Assembly and CFM or GPM ⅝ x ¾ (16 x 19mm) water meter.

Available Models

Suffix:

LG – less gates

OSY – UL/FM outside stem and yoke resilient seated gate valves

¾" Bypass Line Meter:

CFM – cubic feet per minute meter

GPM – gallons per minute meter

LM – less meter

Note: The installation of a drain line is recommended. When installing a drain line, an air gap is necessary.

Pressure – Temperature

Temperature Range: 33˚F – 140˚F (0.5˚C – 60˚C)
Maximum Working Pressure: 175psi (12.1 bar)

Standards

AWWA C511-92; CSA B64
USC Manual for Cross-connection Control, 8th Edition

Approvals

ASSE 1047 · CLASSIFIED C UL US · FM Approved

IMPORTANT: *INQUIRE WITH GOVERNING AUTHORITIES FOR LOCAL INSTALLATION REQUIREMENTS*

NOTE: Piping for 3" 5000CIV will start from #1 gate valve and connect at #2 check valve.

Dimensions — Weights

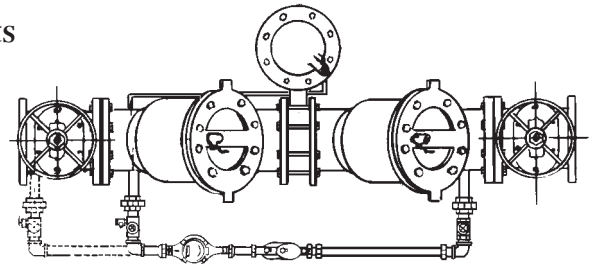

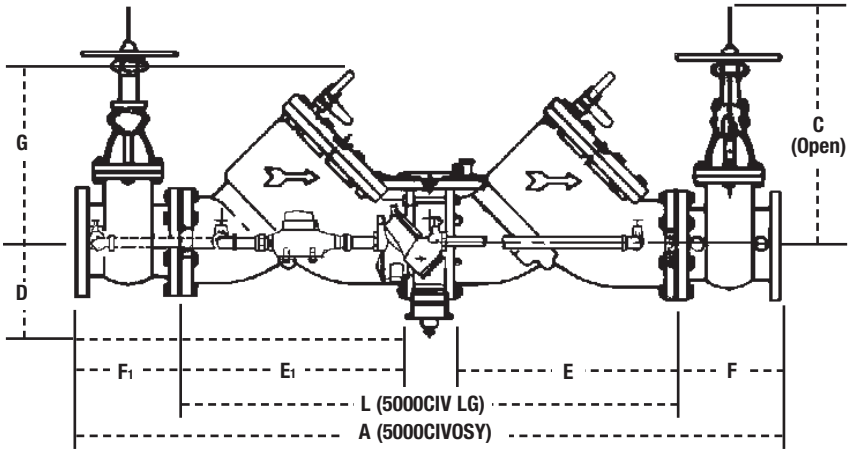

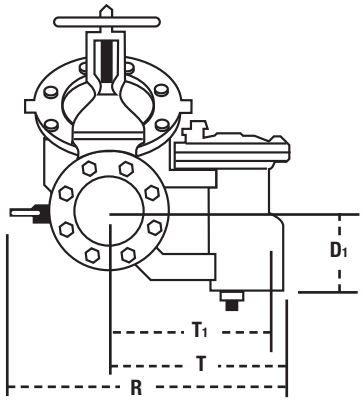

SIZE (DN)		DIMENSIONS																				WEIGHT	
		A		C (OSY)		D		D1		E, E1		F, F1		G		L		R		T		T1			
in.	*mm*	*in.*	*mm*	*in.*	*mm*	*in.*	*mm*	*in.*	*mm*	*in.*	*mm*	*in.*	*mm*	*in.*	*mm*	*in.*	*mm*	*in.*	*mm*	*in.*	*mm*	*in.*	*mm*	*lbs.*	*kgs.*
2½	65	42⅛	1070	16⅜	416	5¼	133	4¼	114	12	305	8	203	7	178	26⅛	664	14	356	9	229	7⅝	194	230	104
3	80	42⅛	1070	18⅞	479	5¼	133	4¼	114	12	305	8	203	7	178	26⅛	664	14	356	9	229	7⅝	194	230	104
4	100	55⅛	1400	22¾	578	6	152	5⅞	149	17	432	9	229	9½	241	37	940	15	381	13⅝	346	11¾	299	470	213
6	150	66	1664	30⅛	765	6	152	6	152	20¾	527	10½	267	14½	368	45	1130	16	406	13⅝	346	11¾	299	798	362
8	200	78½	1994	37¾	959	9¾	248	8⅝	219	26	660	11½	292	18½	470	55¼	1403	17	432	18½	470	16⅜	416	1456	660
10	250	93⅝	2378	45¾	1162	9¾	248	8⅝	219	32	813	13	330	21½	546	67½	1715	18	457	18½	470	16⅜	416	2230	1012

Capacity

As compiled from documented Foundation for Cross-Connection Control and Hydraulic Research at the University of Southern California lab tests.

*Typical maximum flow rate (7.5 feet/sec.) (including shutoffs)

2½" (65mm)

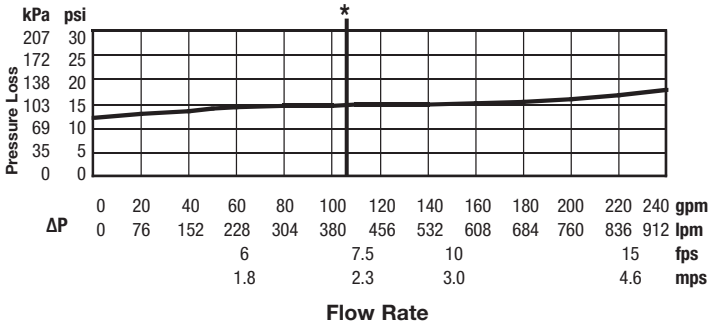

Flow Rate

3" (80mm)

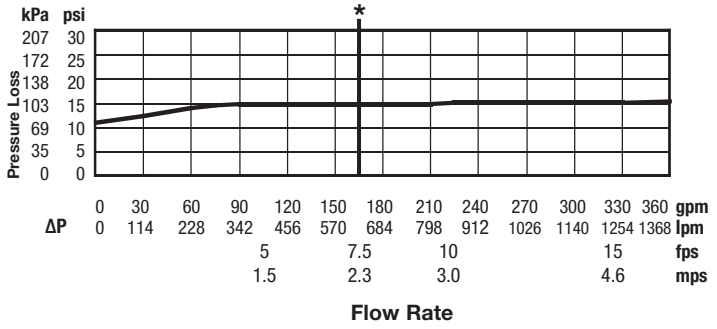

Flow Rate

4" (100mm)

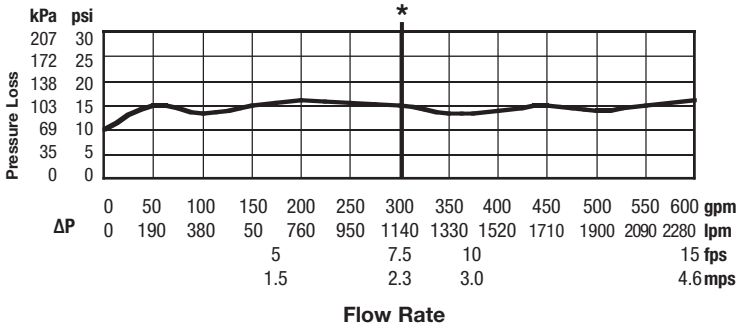

Flow Rate

6" (150mm)

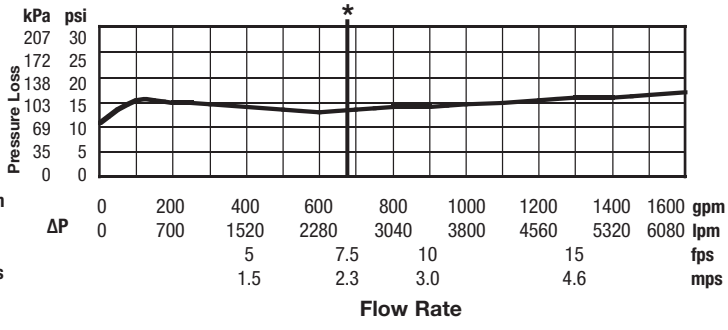

Flow Rate

8" (200mm)

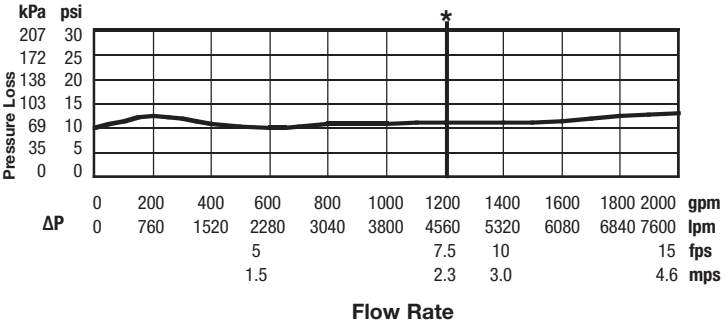

Flow Rate

10" (250mm)

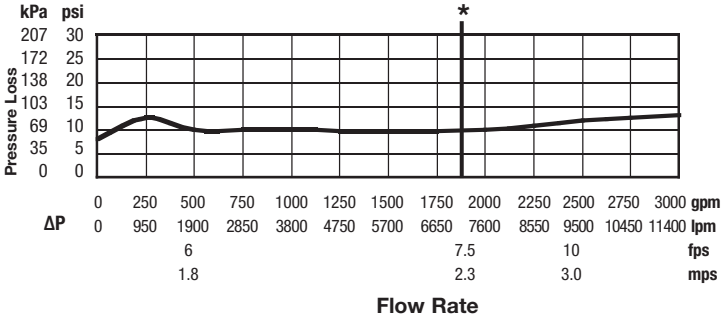

Flow Rate

For additional information, visit our web site at: www.amesfirewater.com

AMES
FIRE & WATERWORKS

www.amesfirewater.com

ISO 9001-2000 CERTIFIED

A Watts Water Technologies Company

USA: Backflow- 1427 N. Market Blvd • Suite #9 • Sacramento, CA 95834 • T: 916-928-0123 • F: 916-928-9333
Control Valves- 18550 Hansen Road • Houston, TX 77075 • T: 713-943-0688 • F: 713-944-9445
Canada: 5435 North Service Rd. • Burlington, ONT. L7L 5H7• T: 905-332-4090 • F: 905-332-7068

ES-A-5000CIV 1004

© 2010 Ames Fire & Waterworks