Series 993, 993RPDA

Reduced Pressure Zone Assemblies
Reduced Pressure Detector Assemblies

4" and 6"

Relief Valve Kits

When ordering specify Ordering Code, Kit No., and Valve Size.

Series 993

ORDERING CODE	KIT NO.	SIZE
Relief Valve Rubber Parts		
0888045	RK 993 RV	4"
0888507	RK 993 RV	6"

Kit consists of: relief valve diaphragm, piston O-rings, disc assembly, seat O-ring and lubricant.

Relief Valve Total		
0888046	RK 993 VT	4"
0888508	RK 993 VT	6"

Kit consists of: relief valve stem assembly, seat O-ring, and lubricant.

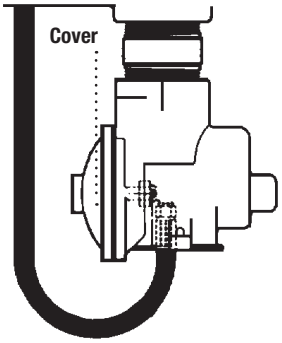

Series 993RPDA

Relief Valve Rubber Parts		
0888405	RK 993RPDA RV	4"
0888517	RK 993RPDA RV	6"

Kit consists of: relief valve diaphragm, piston O-rings, disc assembly, seat O-ring and lubricant.

Relief Valve Total		
0888406	RK 993RPDA VT	4"
0888518	RK 993RPDA VT	6"

Kit consists of: relief valve stem assembly, seat O-ring, and lubricant.

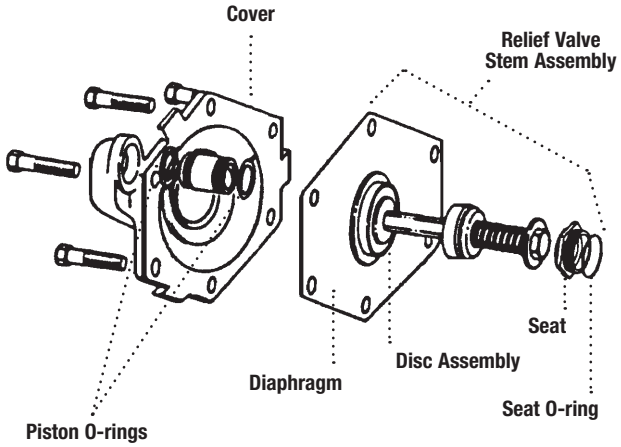

Series 993, 993RPDA

Reduced Pressure Zone Assemblies
Reduced Pressure Detector Assemblies
Sizes 4" and 6"

Check valve kits

When ordering specify Ordering Code, Kit No., and Valve Size.

Series 993

ORDERING CODE	KIT NO.	SIZE
First Check Kits		
0888040	RK 993 CK1	4"
0888500	RK 993 CK1	6"
Second Check Kits		
0888041	RK 993 CK2	4"
0888501	RK 993 CK2	6"

Kit consists of: disc & spring assembly, cover O-ring and lubricant.

First Check Rubber Parts Kits		
LEAD FREE 0888042	RK 993 RC1	4"
0888502	RK 993 RC1	6"
Second Check Rubber Parts Kits		
LEAD FREE 0888043	RK 993 RC2	4"
0888503	RK 993 RC2	6"

Kit consists of: disc assembly, cover O-ring and lubricant.

Seat Kit for Checks		
0888044	RK 993 S	4"
0888504	RK 993 S	6"

Kit consists of: seat, seat O-ring, cover O-ring, retainer wire and lubricant.

Total Rubber Parts Kits		
0888048	RK 993 RT	4"
0888505	RK 993 RT	6"

Kit consists of: disc assembly, cover O-ring, sleeve O-ring, piston O-ring, RV disc assembly, diaphragm, piston seat and lubricant.

Cover Kits		
LEAD FREE 0888047	RK 993 C	4"
0888506	RK 993 C	6"

Kit consists of: cover, cover O-ring and lubricant.

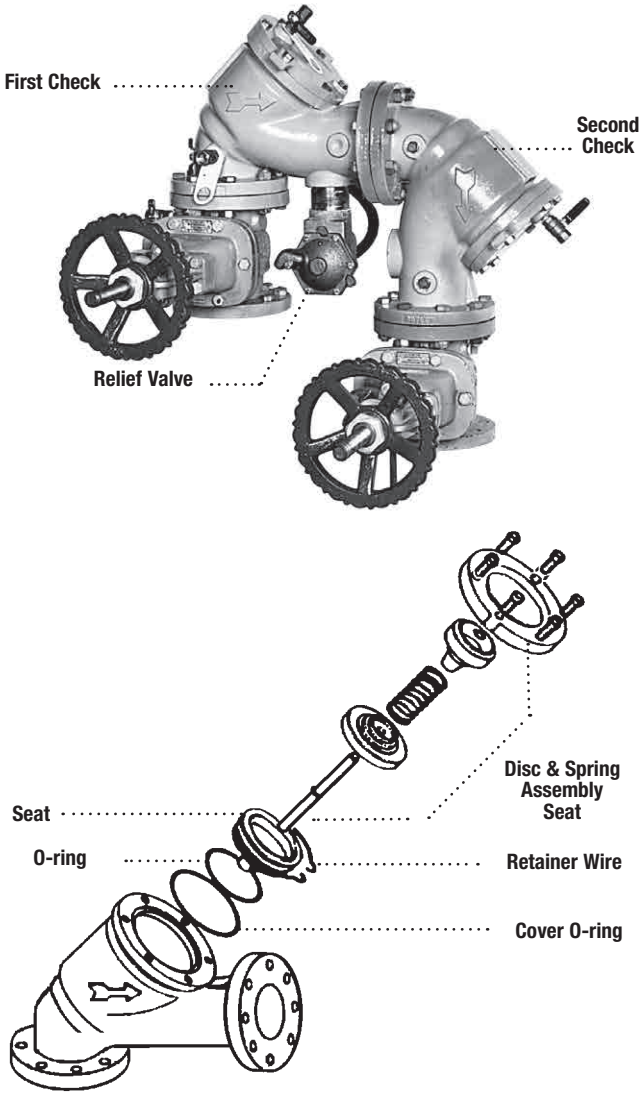

Series 993RPDA

ORDERING CODE	KIT NO.	SIZE
First Check Kits		
0888400	RK 993RPDA CK1	4"
0888510	RK 993RPDA CK1	6"
Second Check Kits		
0888401	RK 993RPDA CK2	4"
0888511	RK 993RPDA CK2	6"

Kit consists of: disc & spring assembly, cover O-ring and lubricant.

First Check Rubber Parts Kits		
LEAD FREE 0888402	RK 993RPDA RC1	4"
0888512	RK 993RPDA RC1	6"
Second Check Rubber Parts Kits		
LEAD FREE 0888403	RK 993RPDA RC2	4"
0888513	RK 993RPDA RC2	6"

Kit consists of: disc assembly, cover O-ring and lubricant.

ORDERING CODE	KIT NO.	SIZE
Seat Kit for Checks		
0888404	RK 993RPDA S	4"
0888514	RK 993RPDA S	6"

Kit consists of: seat, seat O-ring, cover O-ring, retainer wire and lubricant.

Total Rubber Parts Kits		
0888408	RK 993RPDA RT	4"
0888515	RK 993RPDA RT	6"

Kit consists of: disc assembly, cover O-ring, sleeve O-ring, piston O-ring, RV disc assembly, diaphragm, piston seat and lubricant.

Cover Kits		
LEAD FREE 0888407	RK 993RPDA C	4"
0888516	RK 993RPDA C	6"

Kit consists of: cover, cover O-ring and lubricant.