Series 993 RPDA

Reduced Pressure Detector Assembly

Sizes 4", 6" (100, 150mm)

Series 993RPDA Reduced Pressure Detector Assembly is designed for use in accordance with water authority containment programs. This series can be used to prevent the reverse flow of fire protection system substances, i.e., glycerin wetting agents, stagnant water and water of non-potable quality from being pumped or siphoned in the potable water supply.

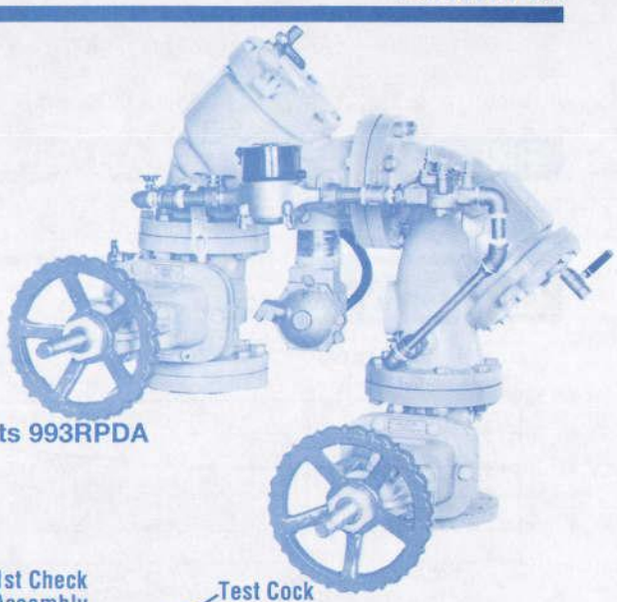

Watts 993RPDA

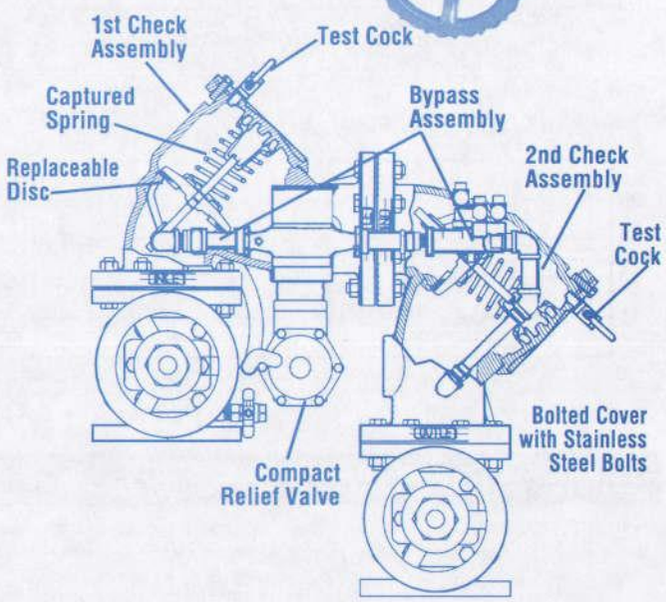

FEATURES

- Fused epoxy coated cast iron body
- Replaceable bronze seats
- Stainless steel internal parts
- Captured springs for safety
- No special tools required for servicing
- Grooved ends available
- Compact bottom-mounted relief valve to reduce clearance requirements
- Compact construction reduces lay length by as much as 70%
- Field proven check/relief valve components for reliability and parts inventory reduction
- Lower installed cost in outdoor installations due to elimination of two elbows, two valve supports, use of shorter spools and smaller enclosure
- Detects underground leaks that historically have been a great annual cost due to waste
- Provides a detection point for unauthorized water use. It can help locate illegal taps
- GPM or CFM meter available
- Furnished with ⅝" x ¾" bronze meter

AVAILABLE MODELS

Suffix:

G - with grooved ends (OS&Y)
OSY - with (UL/FM) outside stem & yoke resilient seated valves
CFM - with cubic feet per minute meter
GPM - with gallons per minute meter

SPECIFICATIONS

A Reduced Pressure Detector Assembly shall be installed on fire protection systems when connected to the public water supply. Degree of hazard present is determined by the local authority having jurisdiction. The assembly shall include two independently operating check modules with captured springs, separated by a differential relief valve, with a hydraulically balanced bypass line. The main line check valves shall be of a poppet design and guided by a bearing in the valve seat and an integral guide in the check module. The check valve seats shall be securely held in place by retaining wires and shall be removable without the use of special tools. The check discs shall be circular in design and shall be replaceable as an individual part. Check valve construction shall include edge protection to prevent over compression of the rubber disc due to thermal expansion or backpressure. The main assembly shall include two resilient seated isolation valves and four test cocks. The bypass line shall be hydraulically sized to accurately measure low flow. The bypass line shall consist of a meter, a small diameter reduced pressure assembly with test cocks and isolation valves. The bypass reduced pressure assembly shall have replaceable seats, a single top mounted access cover and top mounted test cocks and shall be repairable without the use of special tools. The complete assembly shall meet the requirements of UL/FM, ASSE 1047, CSA and shall be a Watts Regulator Company Series 993RPDA-OSY.

Now Available,
WattsBox Insulated Enclosures.
For more information, send for ES-WB or ES-WB-T.

Watts product specifications in U.S. customary units and metric are approximate and are provided for reference only. For precise measurements, please contact Watts Technical Service. Watts reserves the right to change or modify product design, construction, specifications, or materials without prior notice and without incurring any obligation to make such changes and modifications on Watts products previously or subsequently sold.

A LEADER IN VALVE TECHNOLOGY
WATTS® REGULATOR
Since 1874 — Watts Industries, Inc.
Water Products Division • Safety & Control Valves
USA: 815 Chestnut Street, North Andover, MA 01845-6098
Canada: 5435 North Service Road, Burlinton, Ontario L7L 5H7

MATERIALS

Series 993 have FDA approved epoxy coated cast iron check valve bodies with bronze seats and bronze relief valve with stainless steel trim.
All sizes furnished with bronze body ball valve test cocks.

PRESSURE - TEMPERATURE

Suitable for supply pressure up to 175 psi (12.1 bars) and water temperatures to 110°F (43°C) continuous, 140°F (60°C) intermittent.

STANDARDS

Consult factory.

APPROVALS

Consult factory.

CAPACITY

* Typical maximum system flow rate (7.5 feet/sec.)

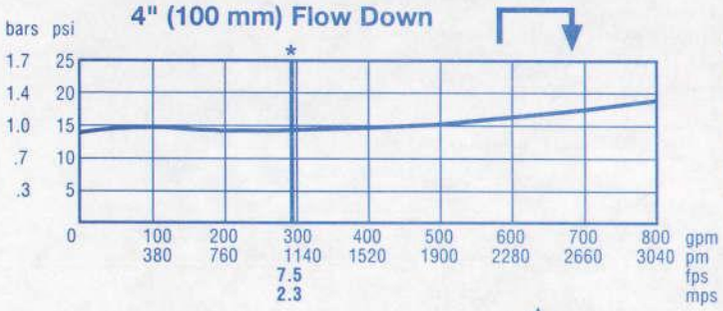

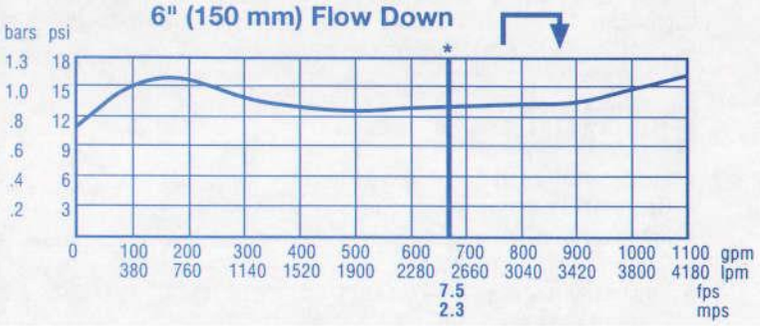

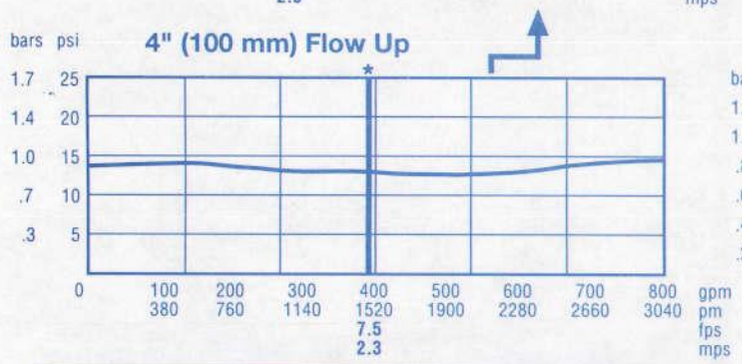

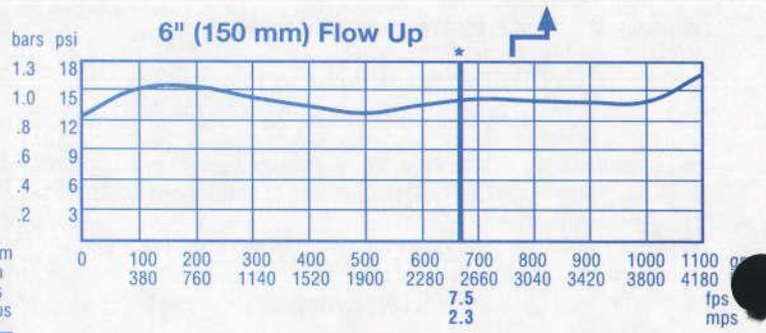

DIMENSIONS - WEIGHTS (approximate)

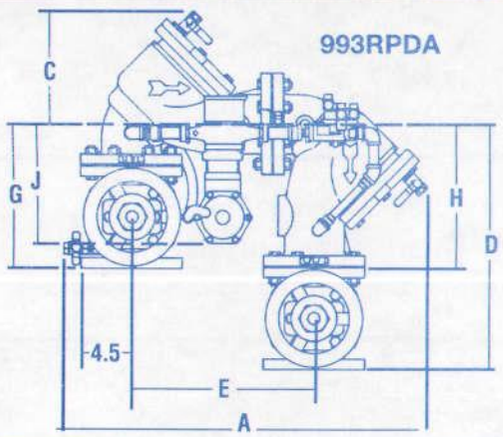

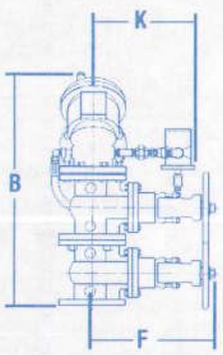

GROOVED END dimensions are the same as below.

Size inches / mm	Weight lbs. / kg.
4 / 100	425 / 193
6 / 150	480 / 218

Model	Size inches / mm	A inches / mm	B inches / mm	C inches / mm	D inches / mm	E inches / mm	F (open) inches / mm	F (close) inches / mm	G inches / mm	H inches / mm	J inches / mm	K inches / mm
993RPDA-OSY-GPM	4 / 100	32¼ / 819	31⅝ / 803	10 / 250	21⅝ / 549	16¼ / 413	23¾ / 603	19¼ / 489	12¾ / 324	12½ / 318	10½ / 267	13 11/16 / 348
993RPDA-OSY-CFM	4 / 100	32¼ / 819	31⅝ / 803	10 / 250	21⅝ / 549	16¼ / 413	23¾ / 603	19¼ / 489	12¾ / 324	12½ / 318	10½ / 267	13 11/16 / 348
993RPDA-OSY-CFM	6 / 150	38 3/16 / 979	38 13/16 / 986	12⅞ / 327	25 15/16 / 659	20⅛ / 511	32½ / 826	27 / 656	15 5/16 / 389	15 5/16 / 389	11 15/16 / 303	16⅞ / 428
993RPDA-OSY-GPM	6 / 150	38 3/16 / 979	38 13/16 / 986	12⅞ / 327	25 15/16 / 659	20⅛ / 511	32½ / 826	27 / 656	15 5/16 / 389	15 5/16 / 389	11 15/16 / 303	16⅞ / 428

A LEADER IN VALVE TECHNOLOGY
WATTS REGULATOR
Since 1874 — Watts Industries, Inc.
Water Products Division • Safety & Control Valves

USA: 815 Chestnut Street, North Andover, MA 01845-6098
Canada: 5435 North Service Road, Burlington, Ontario L7L 5H7

ISO 9001 CERTIFIED

Printed in U.S.A.
© Watts Regulator Co., 1997