Series 957, 957N, 957Z, 957RPDA, 957NRPDA, 957ZRPDA

Check Repair Kits

Sizes 21/2" – 10"

Check valve kits

When ordering specify Ordering Code, Kit No., and Valve Size.

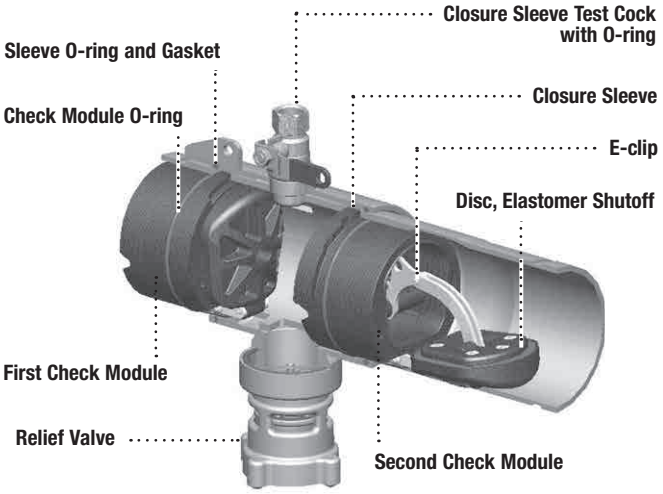

ORDERING NO.	KIT NO	DISC	SIZE
First Check Kits			
7018129	RK 957/957RPDA CK1	EPDM	2½" – 4"
0889370	RK 957/957RPDA CK1-RS	Red Silicone	2½" – 4"
7018132	RK 957/957RPDA CK1	EPDM	6"
0889374	RK 957/957RPDA CK1-RS	Red Silicone	6"
7018135	RK 957/957RPDA CK1	Red Silicone	8"
0899215	RK 957/957RPDA CK1	Red Silicone	10"

Kit consists of: first check module, check module O-ring and disc elastomer.

Second Check Kits			
0899216	RK 957/957RPDA CK2	EPDM	2½" – 4"
0889371	RK 957/957RPDA CK2-RS	Red Silicone	2½" – 4"
0899217	RK 957/957RPDA CK2	EPDM	6"
0889375	RK 957/957RPDA CK2-RS	Red Silicone	6"
0899218	RK 957/957RPDA CK2	Red Silicone	8"
0899219	RK 957/957RPDA CK2	Red Silicone	10"

Kit consists of: second check module, check module O-ring and disc elastomer.

First or Second Check Rubber Parts Kits			
0899220	RK 957/957RPDA RC4	EPDM	2½" – 4"
0889372	RK 957/957RPDA RC4-RS	Red Silicone	2½" – 4"
0899221	RK 957/957RPDA RC4	EPDM	6"
0889376	RK 957/957RPDA RC4-RS	Red Silicone	6"
0899222	RK 957/957RPDA RC4	Red Silicone	8"
0899223	RK 957/957RPDA RC4	Red Silicone	10"

Kit consists of: check module O-ring, disc elastomer and E-clip.

Check Sleeve Cover Kits			
0899240	RK 957/957RPDA C		2½" – 4"
0899241	RK 957/957RPDA C		6"
0899242	RK 957/957RPDA C		8"
0899243	RK 957/957RPDA C		10"

Kit consists of: closure sleeve, sleeve O-ring and gasket.

Total Rubber Parts Kits			
0899244	RK 957/957RPDA RT	EPDM	2½" – 4"
0889373	RK 957/957RPDA RT-RS	Red Silicone	2½" – 4"
0899245	RK 957/957RPDA RT	EPDM	6"
0889377	RK 957/957RPDA RT-RS	Red Silicone	6"
0899246	RK 957/957RPDA RT	Red Silicone	8"
0899247	RK 957/957RPDA RT	Red Silicone	10"

Kit consists of: 1st and 2nd check module O-ring, (2) disc elastomer, (2) E-clips, relief valve diaphragm, relief valve inlet coupler O-ring and relief valve piston assembly.

Series 957, 957N, 957Z, 957RPDA, 957NRPDA, 957ZRPDA

Relief Valve Kits

Sizes 21/2" – 10"

Relief Valve Kits

When ordering specify Ordering Code, Kit No., and Valve Size.

ORDERING NO.	KIT NO.	SIZE
Relief Valve Total Kits		
LEAD FREE' 0899232	RK 957/957RPDA VT	2½" – 10"

Kit consists of: complete relief valve assembly.

ORDERING NO.	KIT NO.	SIZE
Relief Valve Rubber Parts Kits		
LEAD FREE' 0899236	RK 957/957RPDA RV	2½" – 10"

Kit consists of: diaphragm, inlet coupler O-ring and piston assembly.

