MODEL 375, 475 and 475V

Reduced Pressure Principle – Backflow Preventers 2-1/2″ and 3″

Repair Kit Components		2-1/2″	2-1/2″ and 3″										3″
Item #	Item Description	212-BK	RK212-350	RK212-375CK1	RK212-350CK2	RK212-375-SEAT1-ASSY	RK212-350-SEAT2-ASSY	RK212-RV375-HOSE	RK212-RV-ASSY	RK212-LBF-VLV-COVER	BRK212-300-SEAT1-RTNR	BRK212-300-SEAT2-RTNR	3-BK
1	Bolt, Flange	•(x8)											•(x8)
2	Nut, Flange	•(x8)											•(x8)
3	Gasket, Flange	•(x2)											•(x2)
4	O-Ring, Relief Valve								•				
5	Relief Valve Assembly								•				
6	Bolt, Relief Valve								•(x2)				
7	Seat Retainer #1			•							•(x6)		
8	Seat Retainer #2				•							•(x6)	
9	O-Ring, Seat		•(x2)	•	•								
10	Nut, Poppet Retainer			•	•								
11	Washer, #1 Check			•									
12	Washer, #2 Check				•								
13	O-Ring, Stem		•(x2)	•	•								
14	Poppet Retainer			•	•								
15	Seal Ring		•(x2)	•	•								
16	Seat Assembly, #1 Poppet			•		•							
17	Seat Assembly, #2 Poppet				•		•						
18	Sensing Tube Fitting, Relief Valve Cover							•	•				
19	Sensing Tube Fitting, Body							•					
20	Sensing Tube							•					

Whole Goods (Available for individual sale)			
Item #	Item Description	2-1/2″	3″
21	Gate Valve, NRS (FxF)	212-48	3-48
	Gate Valve, NRS (GxF)	212-48GXF	3-48GXF
	Gate Valve, OS&Y (FxF)	212-48OSY	3-48OSY
	Gate Valve, OS&Y (GXF)	212-48OSYGXF	3-48OSYGXF
	Butterfly Valve (GXF)	212-49GXF	3-49GXF
22	Ball Valve, FxF	12-850XL	
23	Ball Valve, MxF	12-850MXL	
24	Cover Retainer Assembly	6-23	
25	Bulkhead Fitting	BHF1CXL-100	
26	Sensing Bulkhead Fitting	BHF1BXL-100	
27	Cover	RK212-LBF-VLV-COVER	

Item No.	Repair Kit Description
2-1/2″	
212-BK	Flanged Kit, 2 1/2″
2 1/2″ and 3″	
RK212-350	Rubber Repair Kit, 2-1/2″ and 3″ 375, 475, and 475V
RK212-375CK1	First Check Assembly Repair Kit, 2-1/2″ and 3″ 375, 475, and 475V
RK212-350CK2	Second Check Assembly Repair Kit, 2-1/2″ and 3″ 375, 475, and 475V
RK212-375-SEAT1-ASSY	#1 Seat Assembly Repair Kit, 2-1/2″ and 3″ 375, 475, and 475V
RK212-350-SEAT2-ASSY	#2 Seat Assembly Repair Kit, 2-1/2″ and 3″ 375, 475, and 475V
RK212-RV375-HOSE	Relief Valve Hose Repair Kit, 2-1/2″ and 3″ 375, 475, and 475V
RK212-RV-ASSY	Complete Relief Valve Repair Kit, 2-1/2″ and 3″ 375, 475, and 475V
RK212-LBF-VLV-COVER	Cover Repair Kit, 2-1/2″ and 3″ 375, 475, and 475V
BRK212-300-SEAT1-RTNR	#1 Check Seat Retainer Bulk Kit, 2-1/2″ and 3″ 375, 475, and 475V
BRK212-300-SEAT2-RTNR	#2 Check Seat Retainer Bulk Kit, 2-1/2″ and 3″ 375, 475, and 475V
3″	
3-BK	Flanged Kit, 3″

MODEL 375, 475 and 475V

Reduced Pressure Principle – Backflow Preventers 2-1/2″ and 3″

Parts Drawing

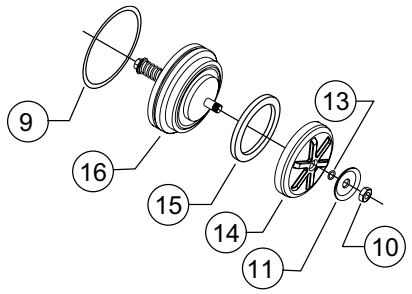

#1 CHECK ASSEMBLY
(375 & 475 2 1/2" & 3")

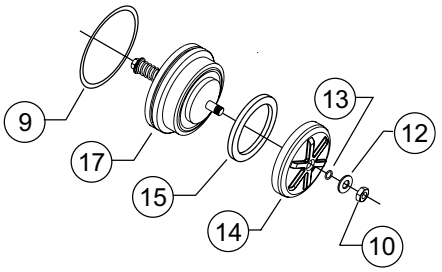

#2 CHECK ASSEMBLY
(375 & 475 2 1/2" & 3")

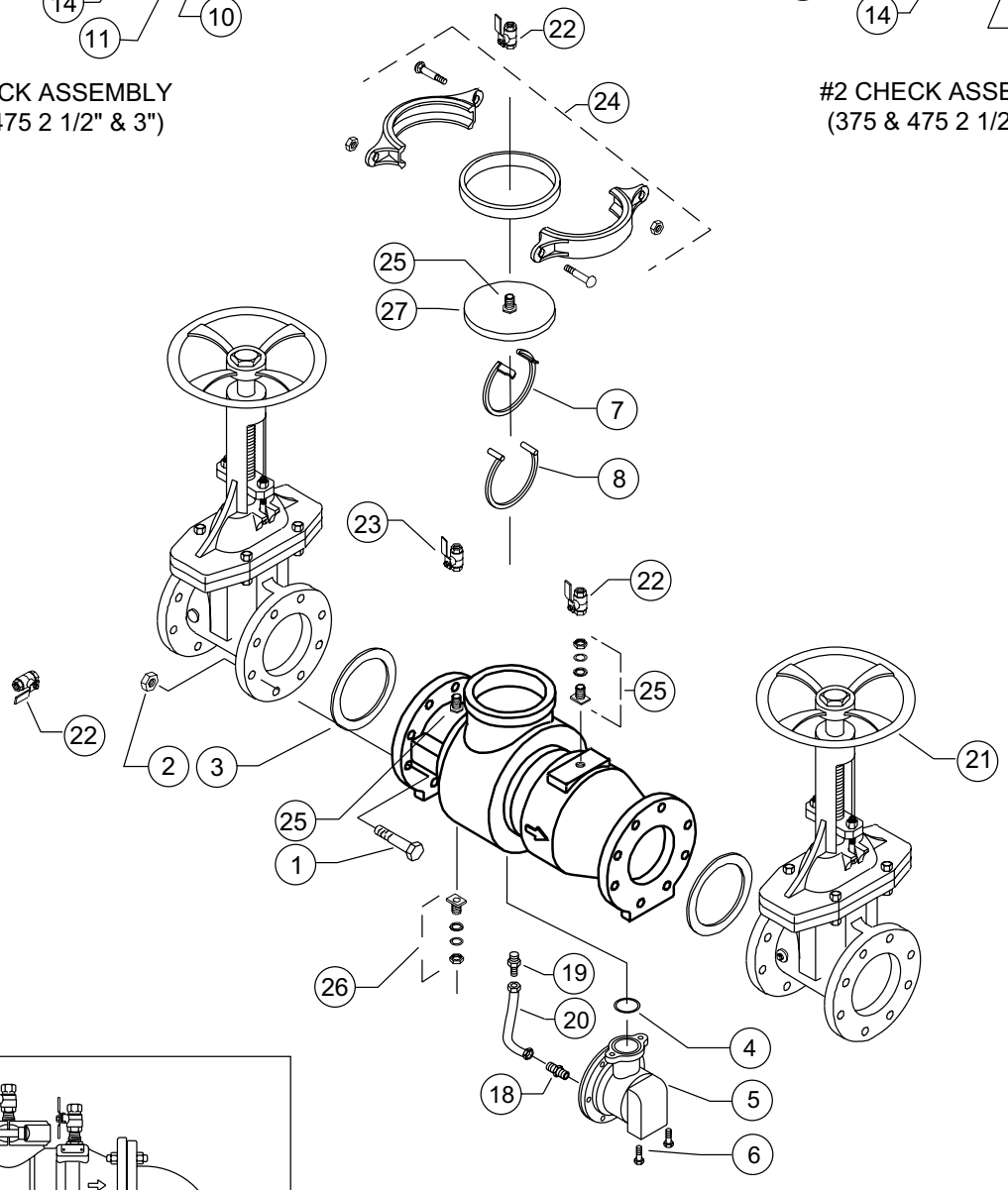

MODEL 375
(2 1/2"-3")

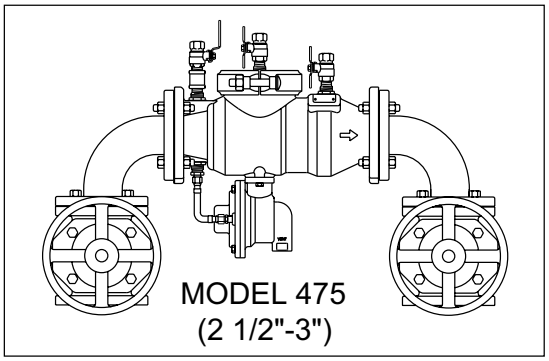

MODEL 475
(2 1/2"-3")

RELIEF VALVE - 2-1/2" to 10"

Models 375, 375A, 375AST, 475 and 475V

Repair Kit Components		2-1/2" - 6"					8" and 10"			
Item #	Item Description	RK212-375	RK212-375R	RK212-375RVCI	RK212-RV-COVER	RK212-RV-PLUNGER	RK8-375	RK8-375R	RK8-375RVCI	RK8-RV-COVER
1	Bolt, Cover				● (x6)					● (x6)
2	Cover				●					●
3	O-Ring, Upper Plunger	●	●	●			●	●	●	
4	Upper Plunger			●		●			●	
5	Diaphragm	●	●	●			●	●	●	
6	Lower Plunger			●		●			●	
7	Seal Ring	●	●	●			●	●	●	
8	Seal Retainer			●					●	
9	Washer			●					●	
10	Bolt			●					●	
11	Relief Valve Spring	●		●			●		●	
12	Relief Valve Seat			●					●	
13	O-Ring, Relief Valve Seat	●	●	●		●	●	●	●	
14	O-Ring, Relief Valve	●	●	●			●	●	●	
	Sensing Tube Fitting				●					●

Item No.	Repair Kit Description
2-1/2" - 6"	
RK212-375	Complete Relief Valve Repair Kit, 2-1/2" - 6"
RK212-375R	Relief Valve Rubber Repair Kit, 2-1/2" - 6"
RK212-375RVCI	Relief Valve Complete Internals Repair Kit, 2-1/2" - 6"
RK212-RV-COVER	Relief Valve Cover Repair Kit 2-1/2" - 6"
RK212-RV-PLUNGER	Relief Valve Plunger Repair Kit 2-1/2" - 6"
8" and 10"	
RK8-375	Complete Relief Valve Repair Kit, 8" and 10"
RK8-375R	Relief Valve Rubber Repair Kit, 8" and 10"
RK8-375RVCI	Relief Valve Complete Internals Repair Kit, 8" and 10"
RK8-RV-COVER	Relief Valve Cover Repair Kit 8" and 10"

Sensing Lines		
Size/Model	Part #	Length
2 1/2"-3" 375/475	3709-36	6"
4" 375 / 2 1/2"-4" 375A	3709-36	6"
6" 375/375A	3710-36	9"
8"-10" 375/375A	4710-36	12"
2 1/2"-4" 375AST	3709-36	6"
6" 375AST	3709-36	6"
8"-10" 375AST	3710-36	9"
4"-6" 475	3710-36	9"
8"-10" 475	4710-36	12"

RELIEF VALVE - 2-1/2" to 10"

Models 375, 375A, 375AST, 475 and 475V

Parts Drawing

