MODEL 575

Reduced Pressure Principle Backflow Preventers 3/4" to 2"

WILKINS

ITEM NO.	DESCRIPTION	3/4"	1"	1 1/4"	1 1/2"	2"
1	BALL VALVE, TAPPED	34-850T	1-850T	114-850T	112-850T	2-850T
2	BALL VALVE	34-850	1-850	114-850	112-850	2-850
3	RELIEF VALVE	5752-CU	5752-CU	5754-CU	5754-CU	5754-CU
4	POPPET ASSEMBLY	552-300	552-300	554-300	554-300	554-300
5	SCREW	552-11B	552-11B	554-11	554-11	554-11
6	WASHER	552-14	552-14	554-14	554-14	554-14
7	SEAL RING	552-12	552-12	554-12	554-12	554-12
8	POPPET	552-30	552-30	554-30	554-30	554-30
9	NO. 1 SPRING	5752-33	5752-33	5754-33	5754-33	5754-33
10	O-RING, COVER (BOLT ON)	037N	037N	152N	152N	152N
	O-RING, COVER (SCREW ON)	146N	146N	N/A	N/A	N/A
11	NO. 1 CHECK COVER (BOLT ON)	5752-3	5752-3	5754-3T	5754-3T	5754-3T
	NO. 1 CHECK COVER (SCREW ON)	5752-3B	5752-3B	N/A	N/A	N/A
12	SCREW	5752-11	5752-11	554-11A	554-11A	554-11A
13	SEAL SCREW	552-11A	552-11A	552-11A	552-11A	552-11A
14	TUBE FITTING	5752A-38	5752A-38	5752A-38	5752A-38	5752A-38
15	TEST COCK	18-860	18-860	14-860	14-860	14-860
16	NO. 2 SPRING	552-33	552-33	554-33	554-33	554-33
17	NO. 2 CHECK COVER (BOLT ON)	552-3	552-3	554-3	554-3	554-3
	NO. 2 CHECK COVER (SCREW ON)	552-3B	552-3B	N/A	N/A	N/A
18	GASKET/O-RING	5752-13	5752-13	031N	031N	031N
19	SCREW	5752-11	5752-11	5754-11A	5754-11A	5754-11A

RUBBER REPAIR KITS

NO. RK 34-575 R REPAIR KIT COMPLETE
Model 575 3/4" & 1" Only

PART NO.	QTY	DESCRIPTION
552-12	2	SEAL, RING POPPET
037N	2	O-RING, COVER (BOLT ON)
146N	2	O-RING, COVER (SCREW ON)
5752-43	1	DIAPHRAGM
011N	1	O-RING, UPPER STEM
116N	1	O-RING, LOWER STEM
024N	1	O-RING, R.V. SEAL
575-12	1	SEAL RING R.V. SEAT
010N	3	O-RING
5752-13	1	GASKET

NO. RK 114-575 R REPAIR KIT COMPLETE
Model 575 1-1/4", 1-1/2", 2" Only

PART NO.	QTY	DESCRIPTION
554-12	2	SEAL RING, POPPET
152N	2	O-RING, COVER
5754-43	1	DIAPHRAGM
010N	1	O-RING, UPPER STEM
4128N	1	QUAD-RING, LOWER STEM
136N	1	R.V. SEAT O-RING
5754-12	1	R.V. SEAT RING
108N	1	O-RING
012N	1	O-RING

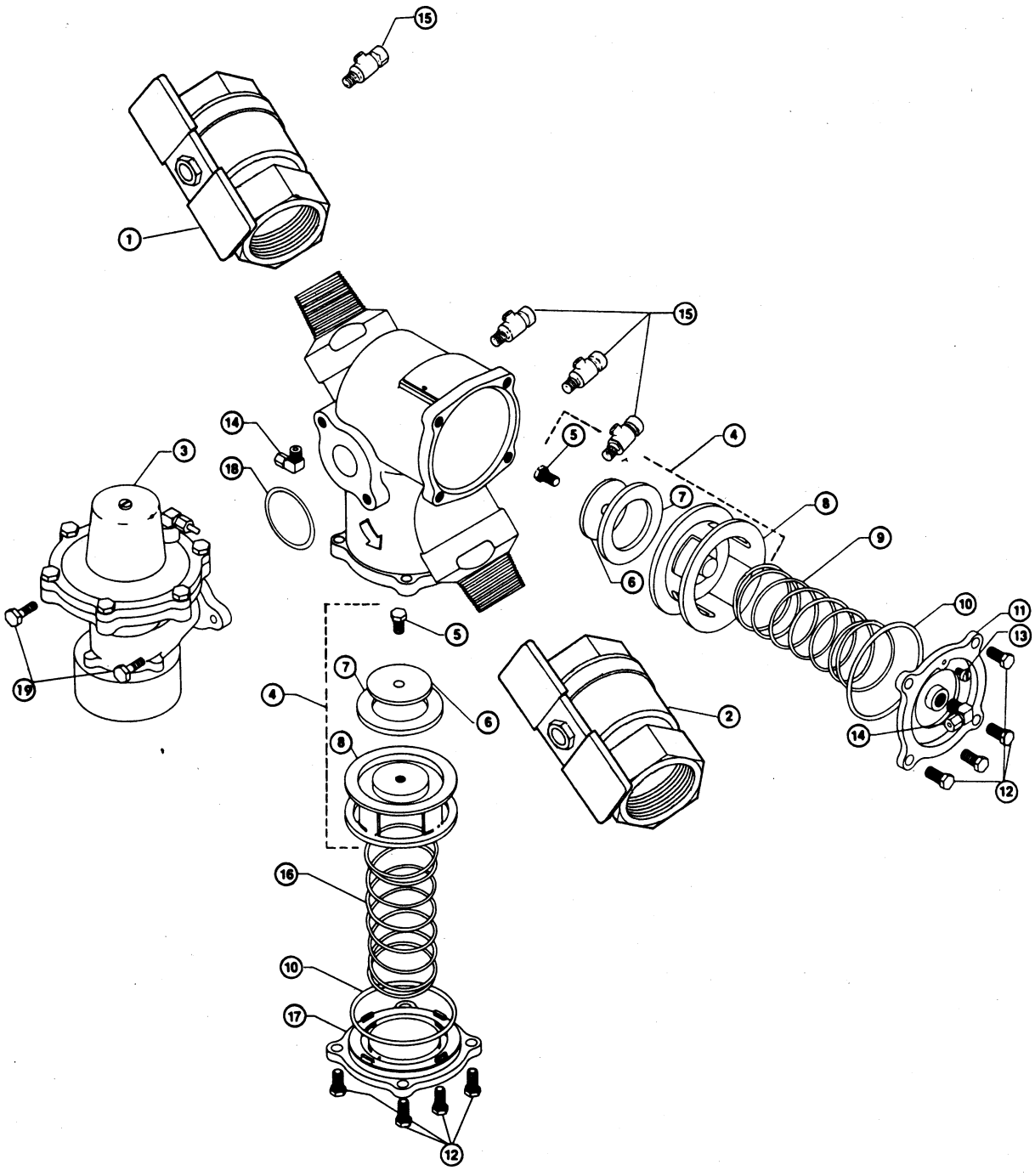
15
1
15
14
18
3
5
4
7
8
9
6
10
11
13
19
5
4
7
6
2
14
8
12
16
10
17
12

WILKINS

MODEL 575
Relief Valve
3/4" & 1"

	RELIEF VALVE COMPLETE		5752-CU
ITEM NO.	DESCRIPTION	QTY.	3 4" & 1"
1	SPACER	2	5752-14A
2	TUBE FITTING	1	5752A-38
3	SEAL SCREW	2	552-11A
4	BOLT	6	5752-11
5	SPRING	1	5752A-33
6	SPRING RETAINER	1	5752A-80
7	NUT, STEM	2	5752-9
8	O-RING	2	010N
9	WASHER, UPPER DIAPHRAGM	1	5752-80
10	DIAPHRAGM	1	5752-43
11	WASHER, LOWER DIAPHRAGM	1	5752-80A
12	TUBE	1	5752-36
13	O-RING, UPPER STEM	1	011N
14	O-RING, LOWER STEM	1	116N
15	STEM ASSY.	1	5752-50
16	O-RING, SEAT	1	024N
17	SEAT	1	5752-18
18	SCREW	3	5752-11A
19	SEAL RING	1	5752-12
20	SEAL RETAINER	1	5752-34
21	O-RING, SEAL RETAINER	1	010N
22	WASHER	1	62-14
23	WASHER	1	5752-14

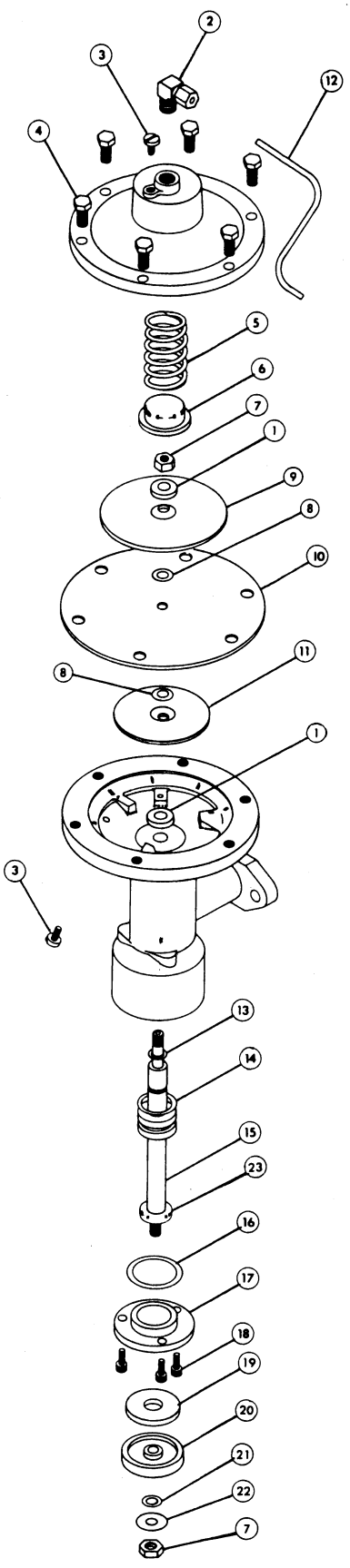

RUBBER REPAIR KIT

NO. RK 34-575 R		REPAIR KIT Model 575 3/4" &1" Only
PART NO	QTY	DESCRIPTION
552-12	2	SEAL, RING POPPET
037N	2	O-RING COVER (BOLT ON)
146N	2	O-RING, COVER (SCREW ON)
5752-43	1	DIAPHRAGM
011N	1	O-RING, UPPER STEM
116N	1	O-RING, LOWER STEM
024N	1	O-RING, R.V. SEAT
575-12	1	SEAL RING, R.V.SEAT
010N	3	O-RING
5752-13	1	GASKET

WILKINS

MODEL 575
Relief Valve
1 1/4", 1 1/2" & 2"

RELIEF VALVE COMPLETE			5754-CU
ITEM NO.	DESCRIPTION	QTY.	1 1/4", 1 1/2", 2"
1	TUBE (UPSTREAM)	1	5754-36A
2	TUBE FITTING	2	5752A-38
3	SEAL SCREW	2	552-11A
4	BOLT	6	5752-11
5	SPRING	1	5754A-33
6	SPRING RETAINER	1	5754A-80
7	STEM NUT	2	5752-9
8	O-RING	1	108N
9	WASHER, UPPER DIAPHRAGM	1	5752-80A
10	DIAPHRAGM	1	5754-43
11	WASHER, LOWER DIAPHRAGM	1	5754-80
12	TUBE	1	5754-36
13	O-RING, UPPER STEM	1	010N
14	QUAD-RING, LOWER STEM	1	4128N
15	STEM ASSEMBLY MOD III	1	5754-50
16	O-RING, SEAT	1	136N
17	SEAT	1	5754-18
18	SCREW	3	5752-11A
19	SEAL RING	1	5754-12
20	SEAL RETAINER	1	5754-34B
21	SPACER	1	5752-14A

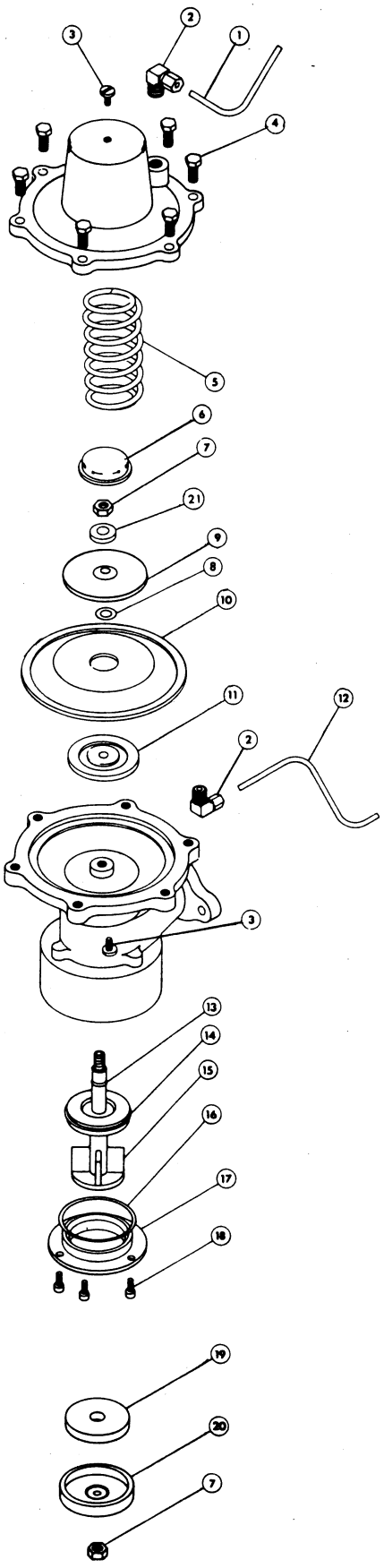

RUBBER REPAIR KIT

NO. RK 114-575		REPAIR KIT Model 575 1-1/4", 1-1/2", 2" Only
PART NO	QTY	DESCRIPTION
554-12	2	SEAL RING, POPPET
12N	2	O-RING, COVER
5754-43	1	DIAPHRAGM
010N	1	O-RING, UPPER STEM
4128N	1	QUAD-RING, LOWER STEM
136N	1	R.V. SEAT O-RING
5754-12	1	R.V SEAT RING
108N	1	O-RING
12N	1	O-RING